Destaques

*Built-in 6 Axis

*Modo de controle dois, adaptar-se a diferentes hábito operação

* Wiht colorido luz LED, pode voar no escuro à noite

Especificações

* Material: ABS
* Drone Tamanho: 13,5 * 13,5 * 5,2 centímetros
* Canais: 4 canais
* Função: Cima / Baixo, frente / trás, esquerda / direita, vôo vôo Para a Esquerda / Para a Direita, Vira & amp; rolos, sensor de gravidade, Arremessar mão, câmera
* Giroscópio: Sim
* Frequência de controle remoto: 2,4 GHz
* Alcance do controle remoto: Aprox 100 metros
* Power Battery: 380mAh 3.7V bateria Li-ion
* Bateria de Controlador: 4 x 1.5V AA (não incluídas)
* Tempo de carregamento: Aprox 50 minutos
* Tempo de Trabalho: cerca de 6 minutos

* Câmara Piexl: 0.3MP

* Cartão de Memória: Micro SD de 1 GB
* Idades apropriadas: acima de 14 anos de idade

Conteúdo da Embalagem

1 x UFO
1 x Controle Remoto
1 x Cabo USB
4 x Hélices
1 x Leitor de Cartão
1 x 1GB TF
1 x chave de fenda
1 x Inglês Manual do Utilizador

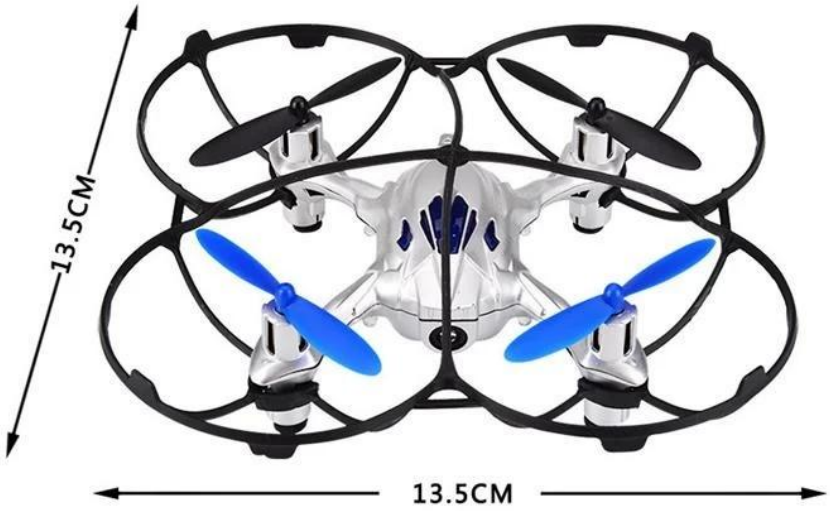
13.5CM
13.5CM

1

2

3

4

产品操作
operation

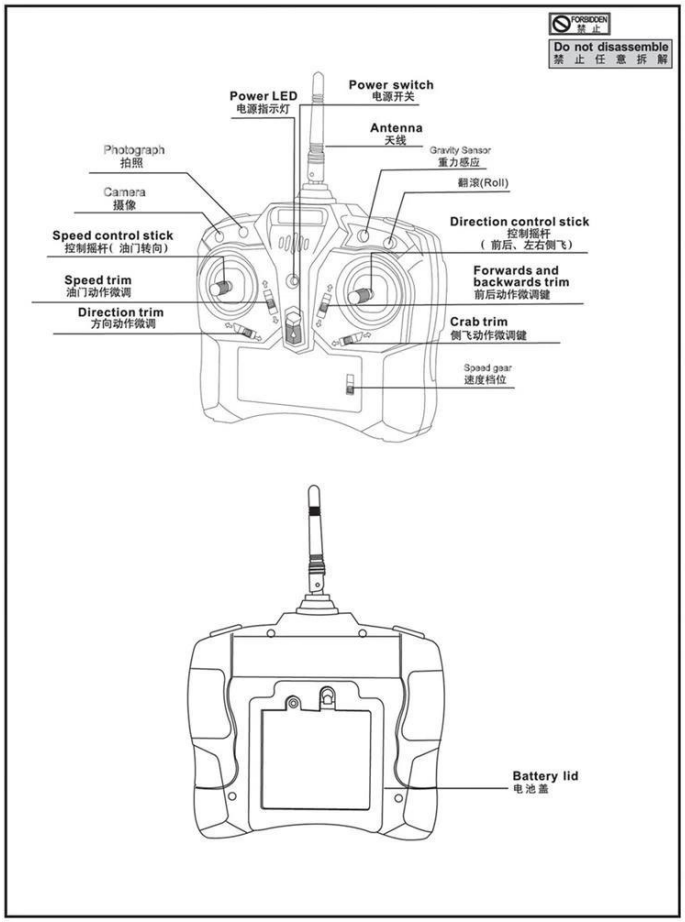

PLEASE PRE-FLIGHT PROFICIENCY FLIGHT SIMULATION 飞行前请先熟练模拟飞行

Before you are familiar with the flight vehicle,pleasure don ' t set it fly,read the instruction carefully.
Ger familiar with all kinds of direction control and keep repeating until you can play it as you perform your wishes
1.Place the flight vehicle a clear open field and the tail of helicopter point to yourself.
2.Practice operating the remote control of each rocker (each operation mode of operation as shown), and repeated practice throttle high / low, left / right, front / rear and left / right operation.
3.The simulation flight practice is very important,please keep practicing until the fingers move naturally when you hear operation orders being call out

在还没有了解飞行器各个动作的操控前，严禁实机飞行，请先阅读说明书，熟悉各种方向的操控并不断的重复，直到手指可熟练的控制各种动作以及方向。
1、将飞行器在空旷的地方，并将飞行器背面对准自己。
2、练习操作遥控器的各摇杆（各动作的操作方式如下图），并反复练习油门高/低、左/右、前/后及左/右操作方式。
3、模拟飞行的练习相当重要，请重复练习直到不需要思索，手指能自然随着喊出的指令移动控制。

Mode	Illustration 图示	Mode	图示
Aileron 副翼	Move left 左移 / Move right 右移	Throttle 油门	Ascent 上升 / Descent 下降
Elevator 升降/前后	Fly forward 前进 / Fly backward 后退	Rudder 方向	Turn left 左旋 / Turn right 右旋

FLIGHT ADJUSTMENT AND NOTICE FOR BEGINNERS 初学飞行调整与注意

CAUTION 注 意

- Check if the screws are firmly tightened
- Check if the transmitter and receivers are fully charged.
- 再次确认螺丝是否锁固?
- 发射器和接收器电池是否足够.

When arriving at the flying field.
请在没有人及障碍物的空旷室内、室外飞行

CAUTION 注 意

- Make sure that no people or obstructions in the vicinity.
- You must first practicehovering for flying safety.this is a basic flight action. (flight vehicle means keeping the helicopter in mid air in a fixed position)
- Please stand approximately 2m diagonally behind the helicopter.
- 确认临地地区没有人和障碍物.
- 为了飞行安全，你必须先练习停悬，这是飞行动作的基础（停悬：飞行机滞留空中并保持固定位置）.
- 练习时，请站在飞行器后方2公尺.

STEP 1 THROTTLE CONTROL PRACTICE 油门控制练习

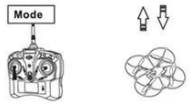

When the flight vehicle begins to lift-off the ground,slowly reduce the throttle to bring the flight vehicle back down. Keep practicing this action until you control the throttle smoothly.

当飞行器离地后，慢慢降低油门将飞行器降下.
持续练习飞行器从地面上升和下降直到你觉得油门控制很顺.